Force Engineering & Testing
19530 Ramblewood Drive
Humble, Texas 77338
Office: (281) 540-6603 Test Lab: (832) 720-4251
www.forceengineeringtesting.com

Product Evaluation Report

PINNACLE STRUCTURES, INC.

Pinnacle Double-Lok 24 Ga. Roof Panel over open framing

Florida Product Approval # 40078.3 R2

Florida Building Code 2026
Per Rule 61G20-3
Method: 1 –D

Category: Structural Components
Subcategory: Roof Deck
Compliance Method: 61G20-3.005(1)(d)
NON HVHZ

Product Manufacturer:
Pinnacle Structures, Inc.
2665 Bill Foster Memorial Hwy
Cabot, Arkansas 72026

Engineer Evaluator:
Johnathan Green, P.E. #88223
Florida Evaluation ANE ID: 12901

Contents:

Evaluation Report: Pages 1 - 4
Details: Pages 5 - 6

JOHNATHAN GREEN
LICENSE
No. 88223
STATE OF
FLORIDA
PROFESSIONAL ENGINEER

AUGUST 31, 2026

THIS DOCUMENT HAS BEEN DIGITALLY SIGNED AND SEALED BY JOHNATHAN GREEN ON THE DATE ADJACENT TO THE SEAL.

PRINTED COPIES OF THIS DOCUMENT ARE NOT CONSIDERED SIGNED AND SEALED AND THE SIGNATURE MUST BE VERIFIED ON ANY ELECTRONIC COPIES.

Force Engineering & Testing
19530 Ramblewood Drive
Humble, Texas 77338
Office: (281) 540-6603 Test Lab: (832) 720-4251
www.forceengineeringtesting.com

Compliance Statement: The product as described in this report has demonstrated compliance with the Florida Building Code 2026, Sections 1504.3.2, 1504.7.

Product Description: Pinnacle Double-Lok, 3" tall trapezoidal Standing Seam Roof Panel, 24 Ga. Steel, 12", 18", 24" panel coverage. Structural Application.

Panel Material/Standards: Material: 24 Ga. Steel, ASTM A792 or ASTM A653 G90 conforming to Florida Building Code 2026 Section 1507.4.3.
Yield Strength: Min. 50.0 ksi
Corrosion Resistance: Panel Material shall comply with Florida Building Code 2026, Section 1507.4.3.

Panel Dimension(s):

Thickness:	0.0235" min.
Width:	12", 18", 24" coverage
Rib Height:	3" Tall Trapezoidal Standing Seam Double Lock Rib

Roof Panel Clips: Sliding Clips HW-2122 or HW-2224, 20 Ga. steel top, 14 Ga. steel base
S-5! DL Wind Clamp HW-569 must be installed on the panel rib at every panel clip
Corrosion Resistance: Per Florida Building Code 2026 Section 1506.7 and Section 1711 for installations within 3000 ft. of a saltwater coastline.

Clip Fastener: (2) ¼-14 x 1 ¼" HWH SD3 (or approved equal) per clip.
Corrosion Resistance: Per Florida Building Code 2026 Section 1506.6, 1507.4.4 and Section 1711 for installations within 3000 ft. of a saltwater coastline.

Substrate Description: Min. 16 Ga. Steel Framing. Framing must be designed in accordance w/ Florida Building Code 2026.

Allowable Design Uplift Pressures:

Double-Lok 24" Coverage

Maximum Allowable Design Pressure:	-55.8 psf	-120.0 psf
Clip Spacing:	5'-0" O.C.	1'-0" O.C.

Double-Lok 18" Coverage

Maximum Allowable Design Pressure:	-66.7 psf	-177.5 psf
Clip Spacing:	5'-0" O.C.	1'-0" O.C.

Double-Lok 12" Coverage

Maximum Allowable Design Pressure:	-93.8 psf	-200.0 psf
Clip Spacing:	5'-0" O.C.	1'-0" O.C.

*Design Pressure includes a Safety Factor = 2.0.
*Interpolation may be used for clip spacings between 1' & 5'

Force Engineering & Testing
19530 Ramblewood Drive
Humble, Texas 77338
Office: (281) 540-6603 Test Lab: (832) 720-4251
www.forceengineeringtesting.com

Code Compliance: The product described herein has demonstrated compliance with The Florida Building Code 2026, Section 1504.3.2, 1504.7.

Evaluation Report Scope: The product evaluation is limited to compliance with the structural wind load requirements of the Florida Building Code 2026, as relates to Rule 61G20-3.

Performance Standards: The product described herein has demonstrated compliance with:

- ASTM E 1592-05 (2017) Test method for structural performance of sheet metal roof and siding systems by uniform static air pressure difference.
- FM 4470 Section 4.6 - 2016 - Foot Traffic Resistance Test.

Reference Data:

1. ASTM E 1592-01
   Force Engineering & Testing, Inc. (FBC Organization # TST-5328)
   Report No. 07-0129T-06
2. FM 4471-10 Section 4.4 Foot Traffic Resistance Test
   Force Engineering & Testing (FBC Organization # TST-5328)
   Report No. 759-0093T-21
3. Certificate of Independence
   By Johnathan Green, P.E. #88223

Test Standard Equivalency: The ASTM E 1592-01 test standard is equivalent to the ASTM E 1592-05 (2017) test standard.

The FM 4471-10 Section 4.4 test standard is equivalent to the FM 4470 Section 4.6 test standard.

Quality Assurance Entity: The manufacturer has established compliance of roof panel products in accordance with the Florida Building Code and Rule 61G20-3.005 (3) for manufacturing under a quality assurance program audited by an approved quality assurance entity.

Minimum Slope Range: Minimum Slope shall comply with Florida Building Code 2026, including Section 1507.4.2 and in accordance with Manufacturers recommendations.

Installation: Install per manufacturer's recommended details.

Limitation: Metal hip and ridge covers are outside the scope of this evaluation report and must be in compliance with FBC 2026 Section 1504.3.1.1 through other product approval.

Force Engineering & Testing
19530 Ramblewood Drive
Humble, Texas 77338
Office: (281) 540-6603 Test Lab: (832) 720-4251
www.forceengineeringtesting.com

Insulation: Manufacturer's approved product (Optional)

Roof Panel Fire Classification: Fire classification is not part of this evaluation.

Shear Diaphragm: Shear diaphragm values are outside the scope of this report.

Design Procedure: Based on the dimensions of the structure, appropriate wind loads are determined using Chapter 16 of the Florida Building Code 2026 for roof cladding wind loads. These component wind loads for roof cladding are compared to the allowable pressure listed above. The design professional shall select the appropriate erection details to reference in his drawings for proper fastener attachment to his structure and analyze the panel fasteners for pullout. Support framing must be in compliance with Florida Building Code 2026 Chapter 22 for steel, and Chapter 16 for structural loading.

Force Engineering & Testing
19530 Ramblewood Drive
Humble, Texas 77338
Office: (281) 540-6603 Test Lab: (832) 720-4251
www.forceengineeringtesting.com

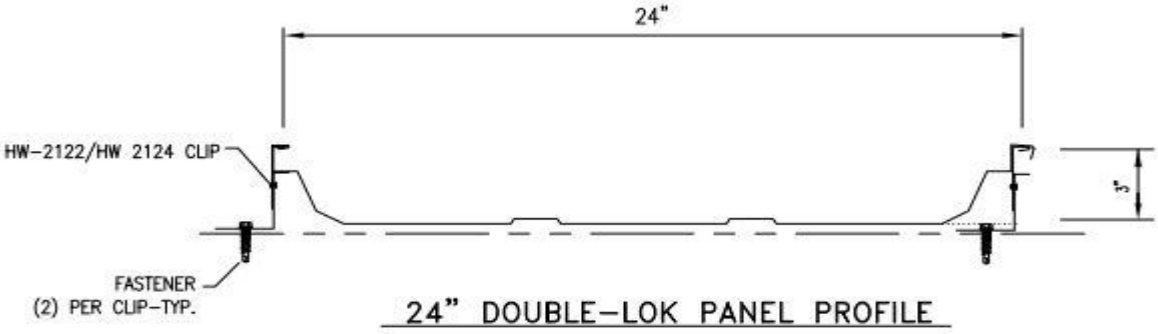

24" DOUBLE-LOK PANEL PROFILE

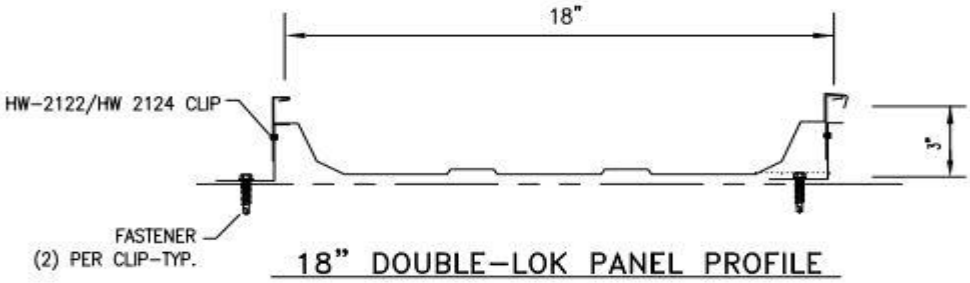

18" DOUBLE-LOK PANEL PROFILE

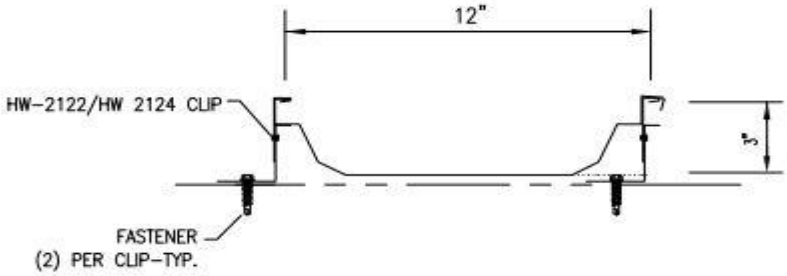

12" DOUBLE-LOK PANEL PROFILE

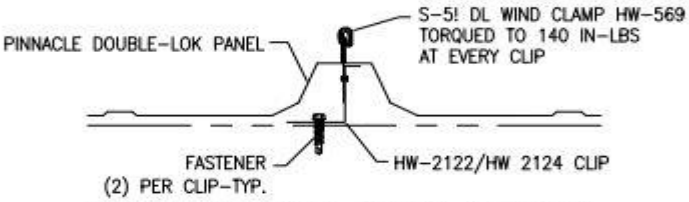

CROSS SECTION AFTER SEAMING

Force Engineering & Testing
19530 Ramblewood Drive
Humble, Texas 77338
Office: (281) 540-6603 Test Lab: (832) 720-4251
www.forceengineeringtesting.com

S-5!™ *Double-Lok*® WIND CLAMP INSTALLATION LOCATION

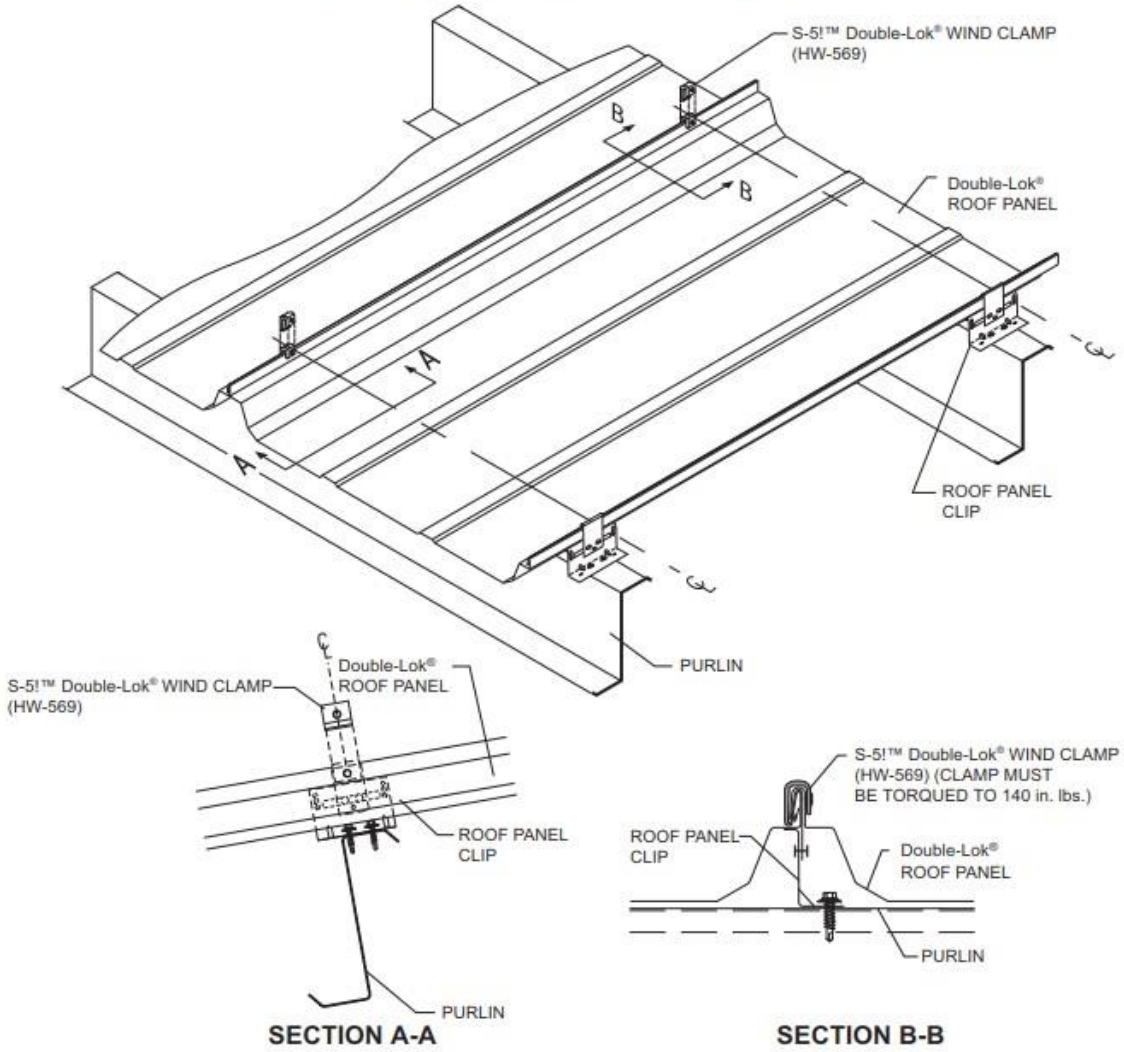

NOTES:
1. Only for use with HW-2122, 2124
2. Torque set screw to 140 in-lbs.